HabasitLINK®
M2540 Radius Flush Grid 1"

Description

- For radius and straight conveying (collapse factor 2.2)
- 35% open area; 53% open contact area; largest opening 6x12.5 mm *(0.24"x0.49")*
- Excellent for cooling and draining
- Easy to clean
- Food approved materials available
- Rod diameter 5 mm *(0.2")*

Available accessories

- Flights
- Side guards
- Hold-down devices
- Hold-down tabs
- GripTop modules
- Lane divider

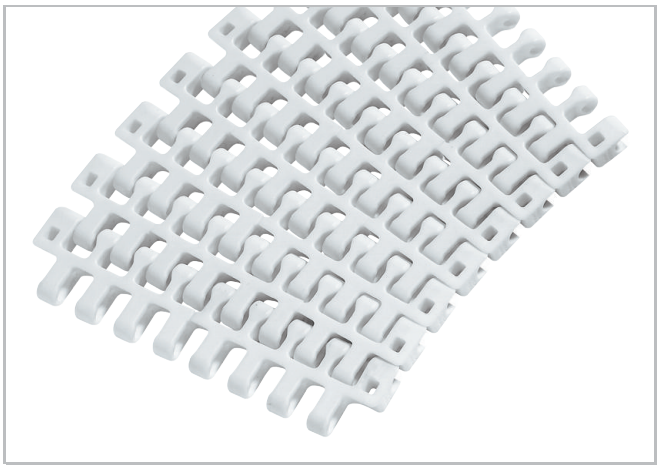

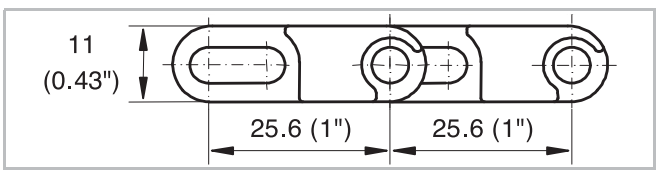

Belt data

Belt material		PP		POM	PA +US	PA
Rod material		POM	PA			
Nominal tensile strength F'_N straight run	N/m *lb/ft*	19000 *1300*	19000 *1300*	27000 *1850*	25000 *1713*	25000 *1713*
Nominal tensile strength F_N in curve [1]	N *lbf*	1000 *225*	1000 *225*	1500 *338*	1300 *293*	1300 *293*
Temperature range	°C *°F*	5 - 93 *40 - 200*	5 - 105 *40 - 220*	-40 - 93 *-40 - 200*	-46 - 116 *-50 - 240*	-46 - 130 *-50 - 266*
Temperature maximum (short-term)	°C *°F*				135 *275*	160 *320*
Belt weight m_B	kg/m² *lb/sqft*	4.7 *0.96*	4.7 *0.96*	7.0 *1.44*	6.0 *1.23*	6.0 *1.23*

[1] For b_0 > 300 mm *(12")* higher values admissible. Refer to LINK-SeleCalc

Diameter of idling rollers (minimum)		Diameter of support rollers (minimum)		Diameter for gravity take-up and center drive rollers (minimum)		Backbending radius for elevators without side guards or hold down devices (minimum)		Backbending radius for elevators with side guards or hold down devices (minimum)	
mm	*inch*	mm	*inch*	mm	*inch*	mm	*inch*	mm	*inch*
50	*2*	50	*2*	100	*4*	150	*6*	250.0	*10*

Use the largest possible backbending radius for elevators with side guards or hold-down devices.

Standard range of belt widths b_0 and collapse factor Q (R_{min} = Q x b_0)

Belt width mm (nom.)	200	250	300	350	400	450	500	550	600	650	700	750	800	850
Belt width inch (nom.)	*8*	*10*	*12*	*14*	*16*	*18*	*20*	*22*	*24*	*26*	*28*	*30*	*32*	*34*
Coll. fact. Q	2.03	2.07	2.10	2.12	2.14	2.15	2.16	2.17	2.18	2.18	2.19	2.19	2.19	2.20
Belt width mm (nom.)	900	950	1000	1050	1100	1150	1200							
Belt width inch (nom.)	*36*	*38*	*40*	*42*	*43*	*45*	*47*							
Coll. fact. Q	2.20	2.20	2.21	2.21	2.21	2.21	2.21							

Belt widths larger than 1200 mm *(48")* are not recommended; *please contact Habasit.*
Real belt widths are in most cases 0.1% to 0.3% smaller.
For PP material up to 750 mm *(30")* -3 mm to 0 mm and -0.4% to 0% for wider belts.
For POM material up to 750 mm *(30")* -3 mm to 0 mm and -0.4% to 0% for wider belts.

Standard belt widths in increments of 50 mm *(2")*. Non-standard widths are offered in increments of 16.66 mm *(0.66")*. Smallest possible width 83.4 mm *(3.25")*.

For detailed material properties refer to the HabasitLINK® Engineering Guidelines.

The nominal tensile strength is valid for 23 °C (73 °F). The admissible tensile force depends on the operating temperature near the drive sprockets. Within the temperature range allowed, the admissible tensile force may vary from 100% to 20% of the nominal tensile strength. For detailed information and correct calculation of effective tensile force refer to the Calculation Guide in the HabasitLINK® Engineering Guidelines.

Product Data Series M2500
Flights and Sideguards M2540

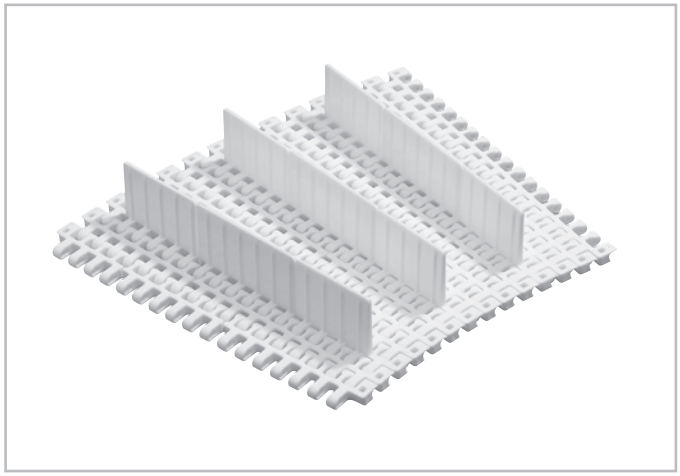

M2540 with middle and edge flights

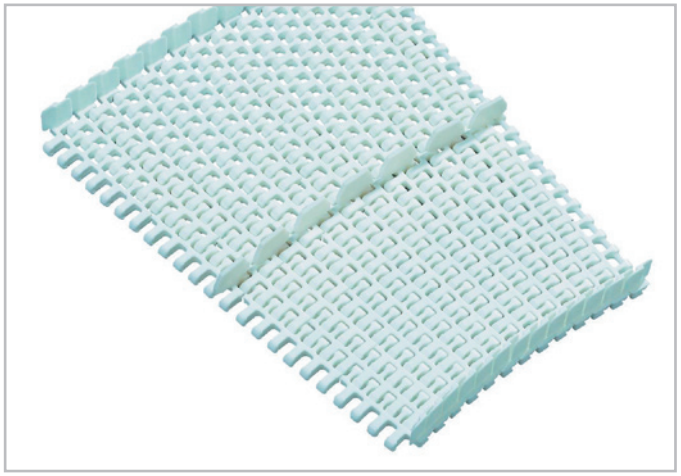

M2540 with sideguards and lane divider

Flights are available in 50mm (2") height, sideguards and lane dividers in 25mm (1") height, see illustrations below. Flights are available with ribs on one side for better release of wet or sticky food products ("no-cling"). They can be cut to specific width and height if required. The collapse factor remains unchanged.

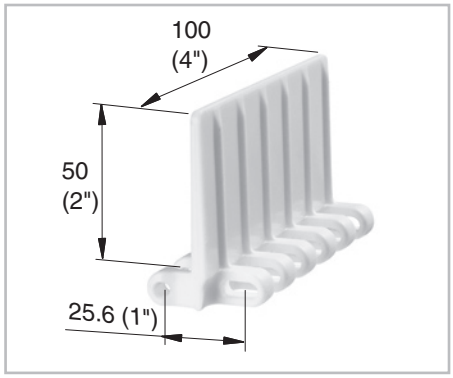

Middle flight
M2540F05

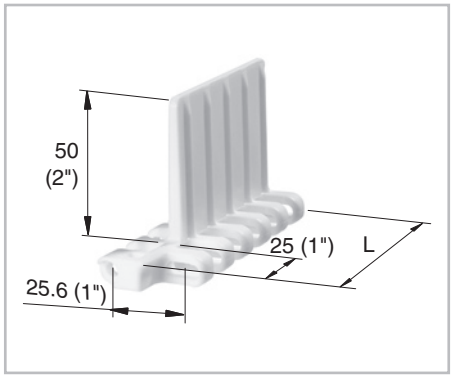

Edge flight
M254RF05 (right side)
M254LF05 (left side)

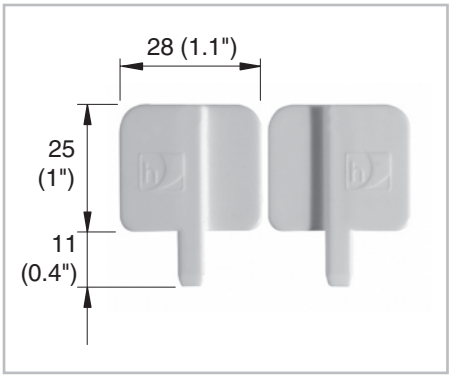

Sideguards
M254RG02 (right side)
M254LG02 (left side)

Standard range of belt widths b_0 for belts with flights

mm	200	300	400	500	600	700	800	900	1000	1100	1200	1300	1400	1500	etc.
inch (nom.)	*8*	*12*	*16*	*20*	*24*	*28*	*32*	*36*	*40*	*44*	*48*	*52*	*56*	*60*	*etc.*

Real belt widths are in most cases 0.1% to 0.3% smaller.

Assembly conceptions for M2540 Radius Belt Flights and Sideguards

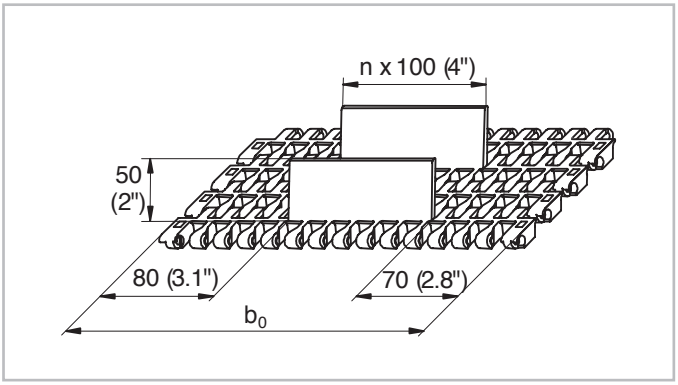

Middle flights only

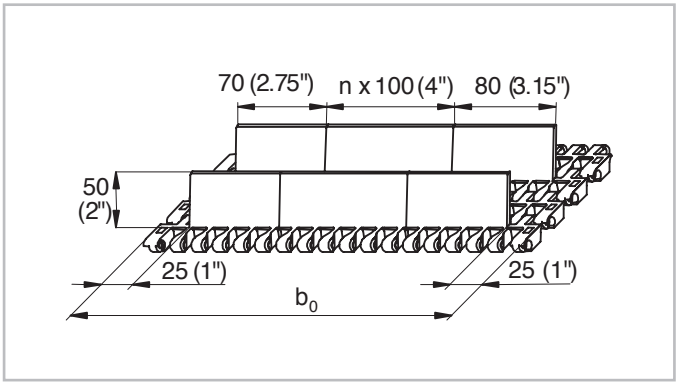

Middle and edge flights

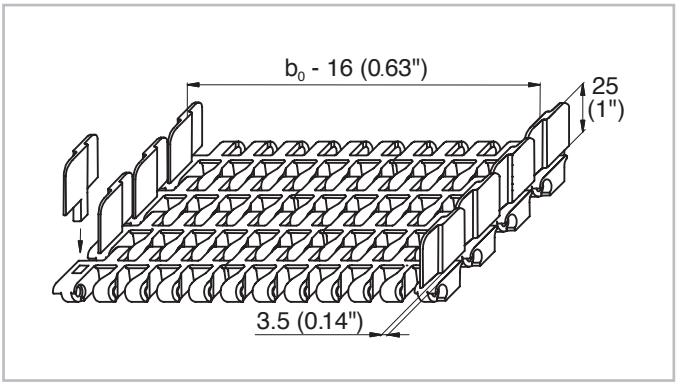

Sideguards only (clip-on version)

Standard indents

The combination of flights and sideguards is possible, but not recommended. With sideguards hold down modules must be used. On the return way the belt has to be supported either on the flights or between flights and sideguards (gap only 15 mm *(0.6")* wide). Do not support or guide the belt on the hold down tabs.

	left belt edge (running direction)	right belt edge (running direction)
Middle flights only (no indent flights)	70 mm *(2.8")*	80 mm *(3.1")*
Middle flights and indent flights	25 mm *(1")*	25 mm *(1")*
Sideguards	3.5 mm *(0.14")*	3.5 mm *(0.14")*

Product liability, application considerations

If the proper selection and application of Habasit products are NOT recommended by an authorized Habasit sales specialist, the selection and application of Habasit products, including the related area of product safety, are the responsibility of the customer.
All indications / information are recommendations and believed to be reliable, but no representations, guarantees, or warranties of any kind are made as to their accuracy or suitability for particular applications. The data provided herein are based on laboratory work with small-scale test equipment, running at standard conditions, and do not necessarily match product performance in industrial use. New knowledge and experiences can lead to modifications and changes within a short time without prior notice.
BECAUSE CONDITIONS OF USE ARE OUTSIDE OF HABASIT'S AND ITS AFFILIATED COMPANIES CONTROL, WE CANNOT ASSUME ANY LIABILITY CONCERNING THE SUITABILITY AND PROCESS ABILITY OF THE PRODUCTS MENTIONED HEREIN. THIS ALSO APPLIES TO PROCESS RESULTS / OUTPUT / MANUFACTURING GOODS AS WELL AS TO POSSIBLE DEFECTS, DAMAGES, CONSEQUENTIAL DAMAGES, AND FURTHER-REACHING CONSEQUENCES.